XD Infrastructure Innovations

DIF

www.xd-ind.com

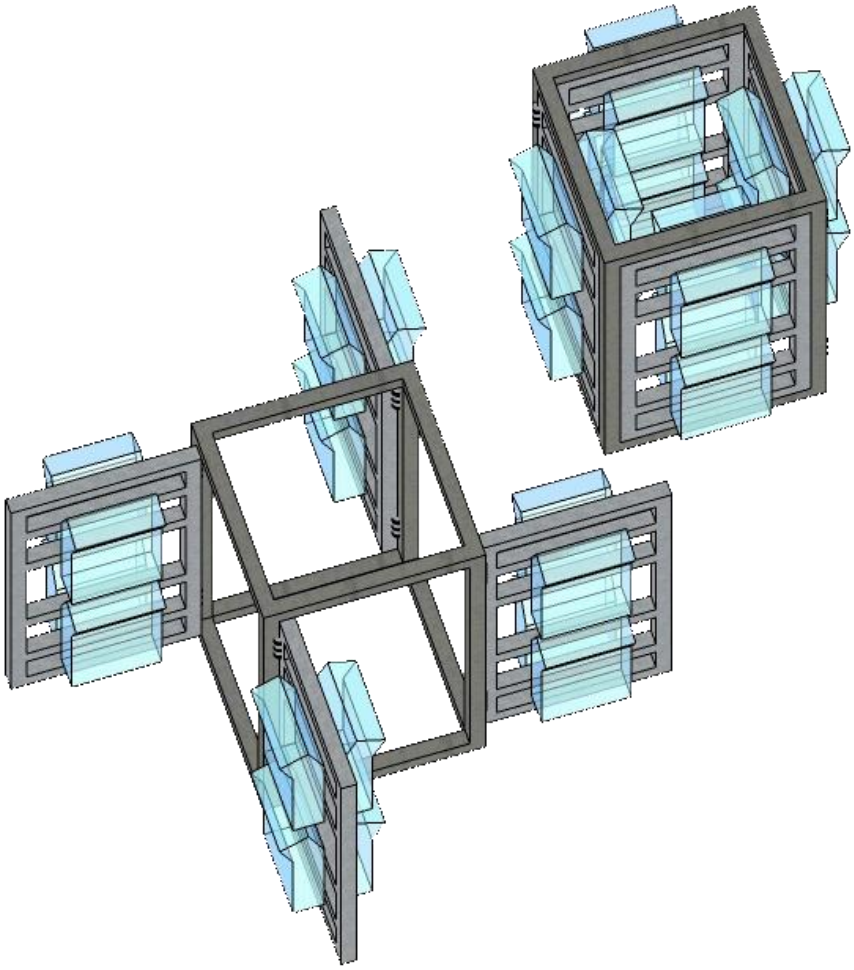

Dynamic Interface Frame

Patent Pending: 14/098,595 & 29/473,732

XD Infrastructure Innovations

DIF

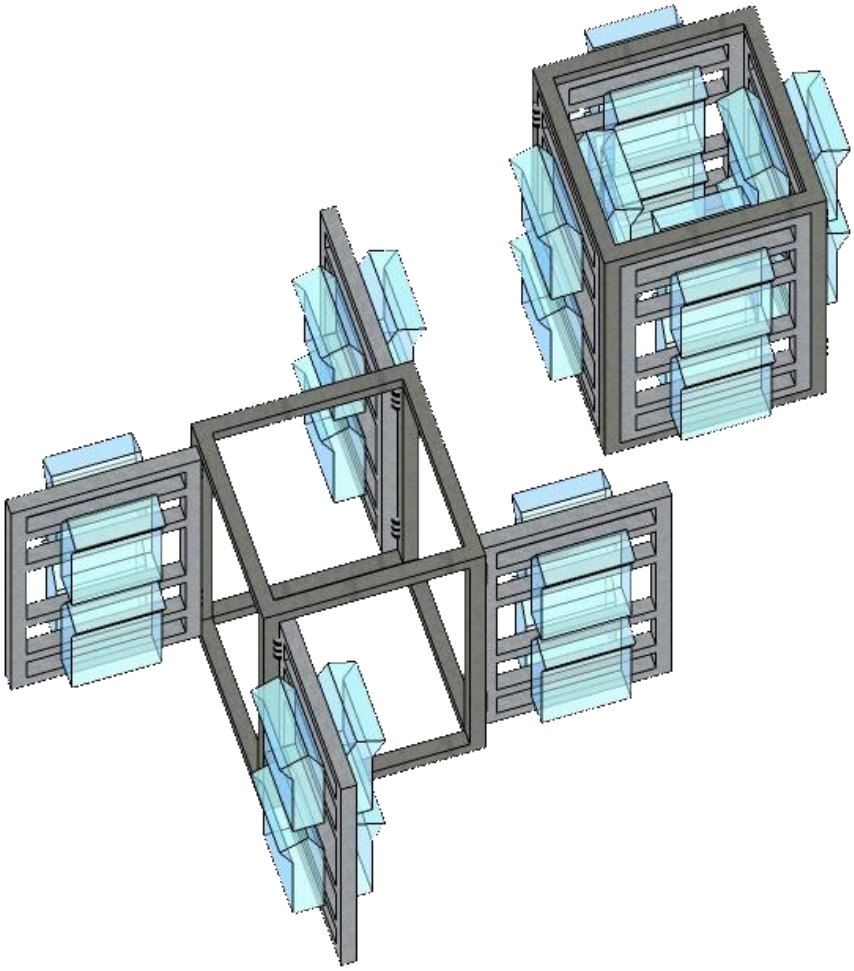

Our Philosophy

The philosophy of XD Infrastructure Innovations is to provide our clients with professional product services that are appropriate, innovative and affordable. We aim for client satisfaction by ensuring that our work is accurate and completed on schedule.

Our mission is to develop cost-effective solutions that will meet the unique present and future requirements of our clients. To accomplish this, we investigate all reasonable options. Where appropriate, we seek out new technologies and design customized products and solutions. We strive to offer excellence in the design and delivery of every product offered by XD Infrastructure Innovations.

XD Infrastructure Innovations

DIF

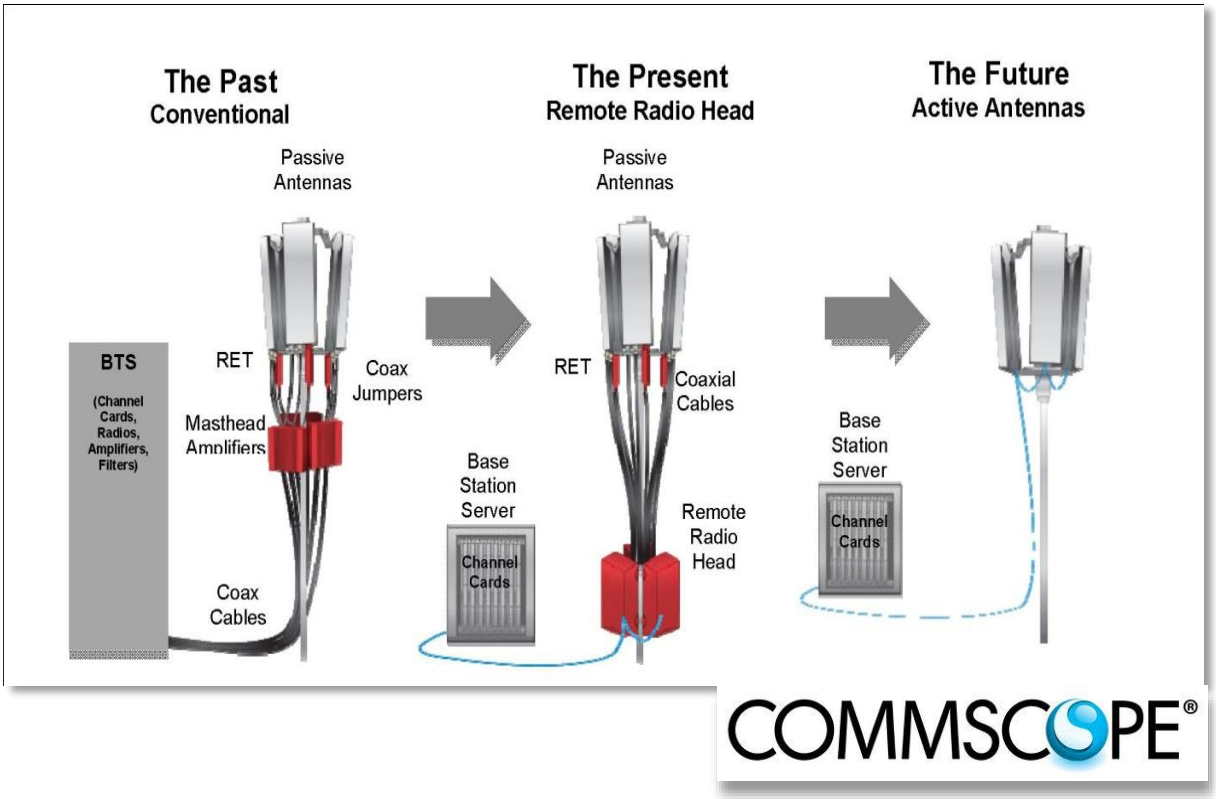

Radio Architecture Evolution

Over the last decade, cell site architectures have been evolving from the legacy cell site architecture where large radios are located remote from the antennas, to an architecture wherein a separate RF portion of the radio can be located more closely to the antenna. This separation of the digital radio, BBU (Base Band Unit), from the analog radio, RRH (Remote Radio Head), allows for a reduction of the equipment foot print at the site and for a more efficient operation of the network. A digital fiber optic link provides the connection between the BBU and RRH.

Issues with Remote Radio Units (RRU)

The first issue is that most carriers nationwide operate on multiple band equipment which means that the more capacity needed for each band there will be a need for multiple RRU's to accomplish this, depending on each of the carriers objectives.

The second issue is Planning or Zoning. RRU's are designed to operate at the location of the antennas which is usually directly behind the antennas, directly below the antennas, or on a mounting near by, such as a collar mount or an H-frame. If the new or existing antennas are visible (not screened) it may be difficult to get an approval by the local jurisdictions.

The third issue is real estate or lease area. A typical cell site may have around twelve (12) RRU's. depending on carrier, sectors, capacity, and technology (2G, 3G, 4G, DAS, etc), sites can have up to seventy two (72) RRU's at one given location. If you have a existing site and you need to install all of these RRU's at the equipment area, more than likely there will be a lease expansion needed. If additional lease area is needed, that is additional costs to the carriers. In some cases there will not be enough space to lease which mean the carriers will not be able to achieve their objectives.

The fourth issue would be structural capacity. Even though many towers new and existing can accommodate the excessive weight of the RRU's, the issue are the attachment methods. Many of the standard mounting collars, standoffs, etc. are not designed to hold this weight. If the tower mounts which hold the RRU's are not adequate, the RRU's will need to be mounted at the equipment area.

XD Infrastructure Innovations

DIF

Current RRU Mounting Methods

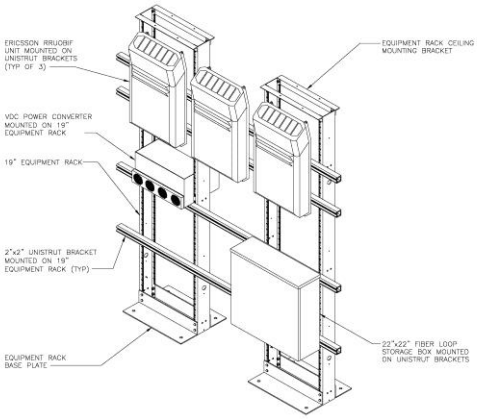

Double FIF Rack Design

- 2' x 6'
- 3 – 6

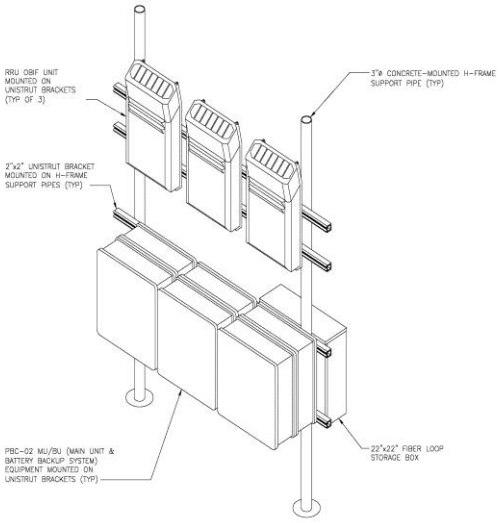

H-Frame Design

- 2' x 6'
- 3 – 6

Note: RRU style will vary depending on manufacturer

Issues with RRU Installation Methods

Double FIF Rack

This design is not seismic rated for Zone 4

Will take up a FIXED space of 2'x6'

Holds up to 6 RRU's (typically)

Indoor only RRU's will be grounded to a BUS bar, not FIF rack so more ground wire will be needed

H-Frame

Will take up a FIXED space of 2'x6' (typically)

Holds up to 6 RRU's (typically)

RRU's will be grounded to a BUS bar, not FIF rack so more ground wire will be needed

Antenna Pipe Mount

Holds up to 2 RRU per antenna pipe

RRU's will be grounded to a BUS bar

Center Mast Pipe mount

This design is not seismic rated for Zone 4

Will take up a 3' diameter ground space

Holds up to 3 RRU's

Wall mount

This design is not seismic rated for Zone 4

There will be limited or no wall space do to all of the conduits and utility equipment mounted and installed to the walls

XD Infrastructure Innovations

DIF

Dynamic Interface Frame (DIF)

XD Infrastructure Innovations has taken many of needs of the RRU's as well as the issues in today's methods of RRU installation. We have designed the DIF to meet the needs of the carriers with considerations for the construction installation practices.

Key Features

Seismic rated for Zone 4

Hold up to 24 RRU's

Will take up a FIXED space of 3'x3'

RRU will be grounded to the DIF, and from the DIF to a BUS bar (less ground wire needed)

Constructed of Galvanized steel and powder coated for aesthetics and durability

DIF can be designed for any specific Carrier or requirements

Indoor or Outdoor

Packaged flat and pre-assembled with installation instructions

DIF loading capacity of 1,335 lbs.

Will ship to the 48 states (Hawaii and Alaska on a case by case basis)

XD Infrastructure Innovations

DIF

Dynamic Interface Frame (DIF)

SuperFlex Coax Jumpers
To prevent coax kinking and damage

Stackable Snap on Hangers

To secure coax

XD Infrastructure Innovations

DIF

Dynamic Interface Frame Structural Parameters

Description of the project:

Structural calculation of telecomm cabinet mount, Dynamic Interface Frame (D.I.F.) manufactured by Dimension 5 Innovations.

The proposed D.I.F. (36" SQ x 7'-0" h) is to house (16)- Radio Remote Head (RRH) mounted on concrete slab or wooden sleeper beams.

Design Codes:

2010 California Building Code

Design Criteria:

D.I.F. is to be installed at random locations in the State of California. Lateral force is to be computed by assuming critical seismic or wind load condition as required by code.

Seismic: Assuming seismic fault A locations,
Category IV,
Site D, Ss= 2.569, S1= 0.935, Rp=2.5 ap=1.0, Ip= 1.5

Wind: Assuming 80'-0" elevation, Exposure C, 120 mph, I=1.5
P= 59.1 psf

D.I.F. DL = 375 lbs
RRU DL = 60 lbs ea. (16) total

Assuming supporting concrete slab is 4 ½" min. or wooden sleeper is 5 ½" thick min.

Disclosure:

Please be advised that the evaluation and recommendations made were based on current building codes without site specific plans and without on-site investigation and verification. With this inherent limitation, the design and evaluation was done in accordance with generally accepted engineering principles and practice. When in doubt about the accuracy of this report to a site application or the proposed design does not fit into a specific site condition, the engineer of record shall be notified immediately for remedial solutions.

Infrastructure Innovations

DIF

Dynamic Interface Frame Dimensions

ITEM NO.	PART NUMBER	DESCRIPTION	QTY.
1	DI-1012_A	Vert. Frame Ass'y	2
2	DI-1011_A	Door Assembly	4
3	DI-1020_A	Horiz. Channel	4
4	DI-1033	Cable Support	1
5	DI-1032	Znc-Pltd STL Flat Head Phil Machine Screw 1/4"-20 Thread, 2-1/4" Length	50
6	DI-1037	Cross Brace	1
7	DI-1038	Znc-Pltd STL Machine Screw Nut w/Tooth Washer 1/4-20" Thrd Sz	66
8	DI-1031	Znc-Pltd STL Flat Head Phil Machine Screw 1/4"-20 Thread, 2 1/4" Length	16
9	DI-1034	Znc-Pltd STL Pan Head Phil Sheet Metal Screw, #10	6

Note: Overall weight = 345 LB.

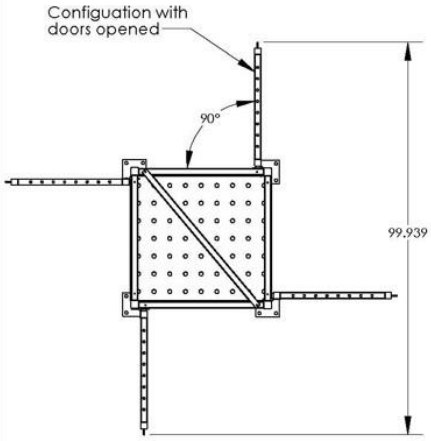

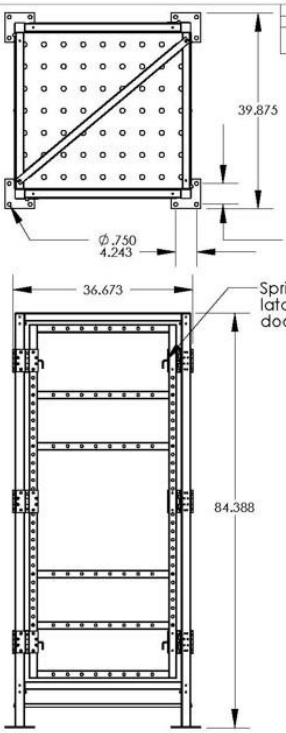

REVISIONS			
REV.	DESCRIPTION	DATE	APPROVED
A	Added components and compoent revision changes	7/27/12	MM

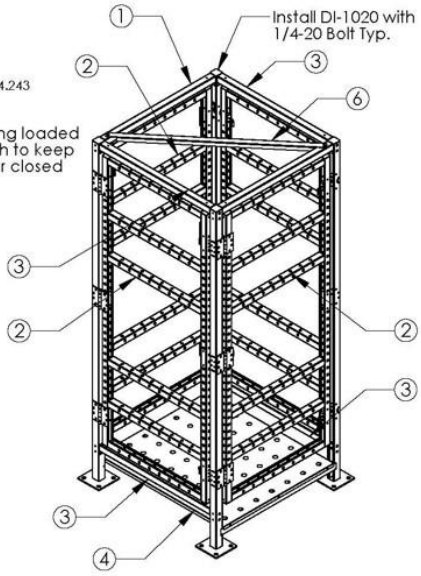

PROPRIETARY AND CONFIDENTIAL
THE INFORMATION CONTAINED IN THIS DRAWING IS THE SOLE PROPERTY OF DIMENSION 5 INNOVATIONS. ANY REPRODUCTION IN PART OR AS A WHOLE WITHOUT THE WRITTEN PERMISSION OF DIMENSION 5 INNOVATIONS IS PROHIBITED.

NEXT ASSY | USED ON
APPLICATION

DIMENSIONS ARE IN INCHES
TOLERANCES:
FRACTIONAL ±
ANGULAR: MACH ± BEND ±
TWO PLACE DECIMAL ±.03"
THREE PLACE DECIMAL ±.01"

MATERIAL 12GA CRS
FINISH Galvanized
DO NOT SCALE DRAWING

	NAME	DATE
DRAWN	JZ	7/27/12
CHECKED	JZ	7/27/12
ENG APPR.	JZ	7/27/12
MFG APPR.	SN	7/30/12
Q.A.	BM	7/30/12

COMMENTS:
Dimension

Dynamic Interface Frame (DIF) Complete Assembly

SIZE A | DWG. NO. DI-1010 | REV. A
SCALE: 1:4 | WEIGHT: | SHEET 1 OF 2

Infrastructure Innovations

DIF

Dynamic Interface Frame Assembly

ITEM NO.	PART NUMBER	DESCRIPTION	QTY.
1	DI-1012_A	Vert. Frame Ass'y	2
2	DI-1011_A	Door Assembly	4
3	DI-1020_A	Horiz. Channel	4
4	DI-1033	Cable Support	1
5	DI-1037	Cross Brace	1
6	DI-1032	Znc-Pltd STL Flat Head Phil Machine Screw 1/4"-20 Thread, 2-1/4" Length	50
7	DI-1038	Znc-Pltd STL Machine Screw Nut w/Tooth Washer 1/4-20" Thrd Sz	66
8	DI-1031	Znc-Pltd STL Flat Head Phil Machine Screw 1/4"-20 Thread, 2 1/4" Length	16
9	DI-1034	#10 Self-threading screw	6

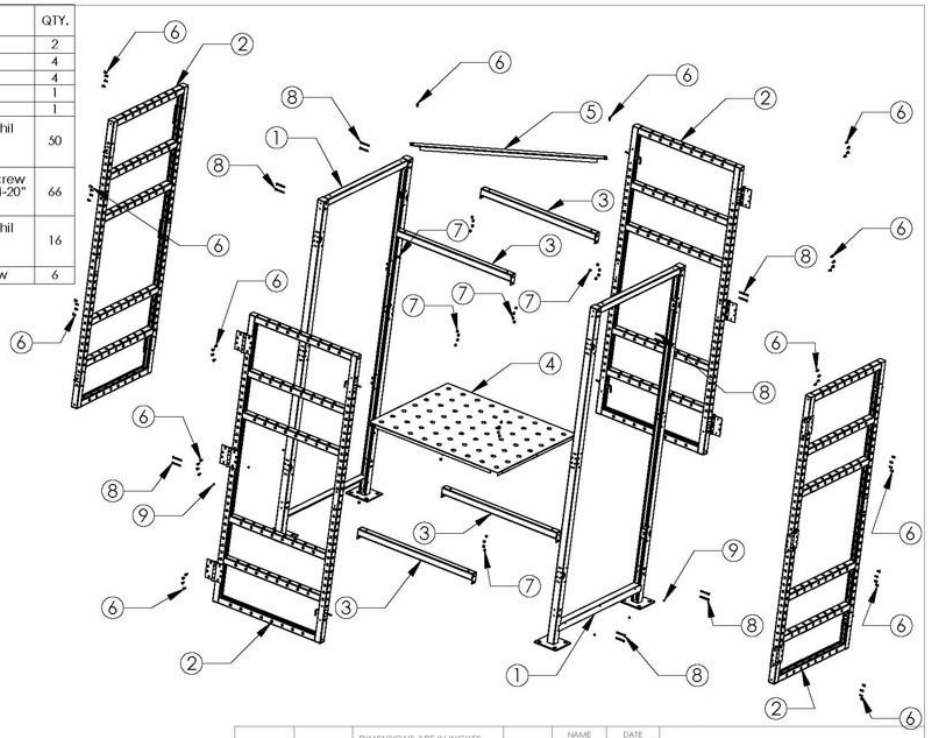

PROPRIETARY AND CONFIDENTIAL
THE INFORMATION CONTAINED IN THIS DRAWING IS THE SOLE PROPERTY OF DIMENSION 5 INNOVATIONS. ANY REPRODUCTION IN PART OR AS A WHOLE WITHOUT THE WRITTEN PERMISSION OF DIMENSION 5 INNOVATIONS IS PROHIBITED.

NEXT ASSY | USED ON
APPLICATION

DIMENSIONS ARE IN INCHES
TOLERANCES:
FRACTIONAL ±
ANGULAR: MACH ± BEND ±
TWO PLACE DECIMAL ± .03"
THREE PLACE DECIMAL ± .01"

MATERIAL 12GA Gal. St.
FINISH Galvanized
DO NOT SCALE DRAWING

	NAME	DATE
DRAWN	JZ	7/27/12
CHECKED	JZ	7/27/12
ENG APPR.	JZ	7/27/12
MFG APPR.	SN	7/30/12
Q.A.	BM	7/30/12

COMMENTS:
Dimension

Dynamic Interface Frame (DIF) Complete Assembly

SIZE A | DWG. NO. DI-1010 | REV. A
SCALE: 1:4 | WEIGHT: | SHEET 2 OF 2

XD Infrastructure Innovations

DIF

Dynamic Interface Frame Scenario

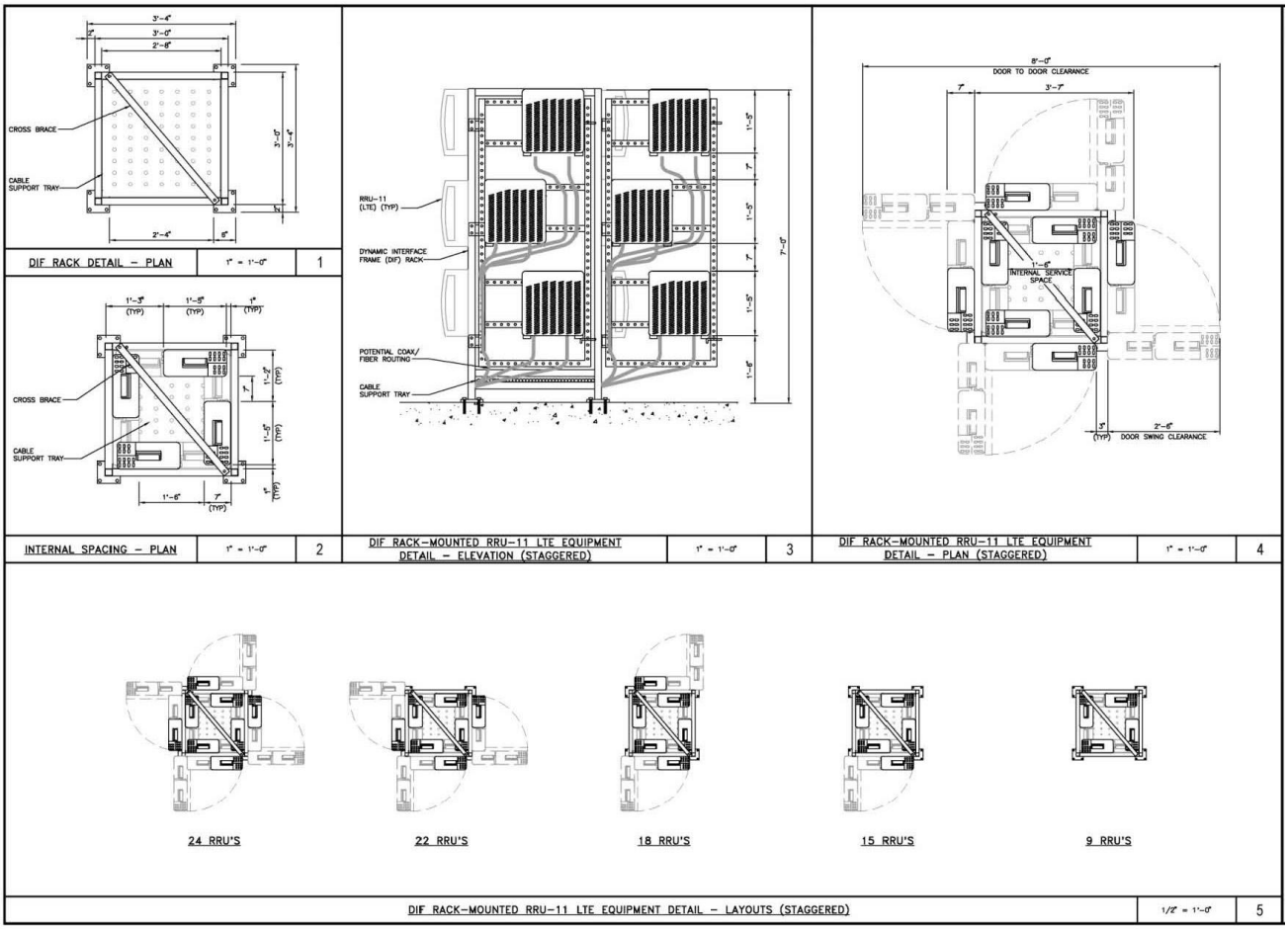

Note: RRU style will vary depending on manufacturer

XD Infrastructure Innovations

DIF

Dynamic Interface Frame Scenario

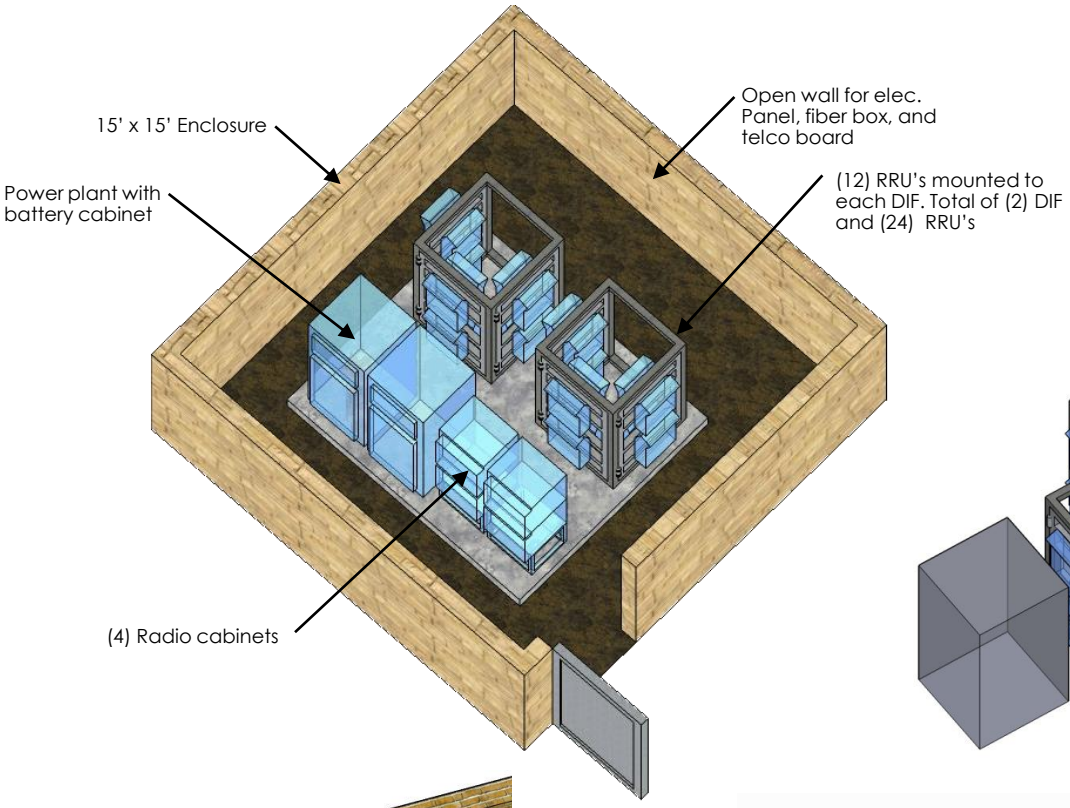

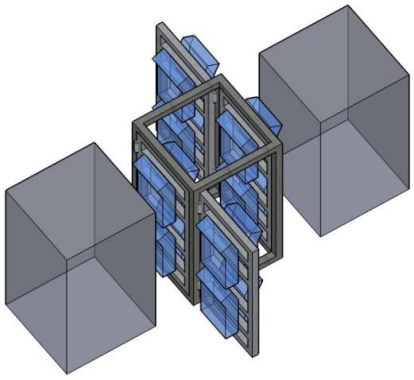

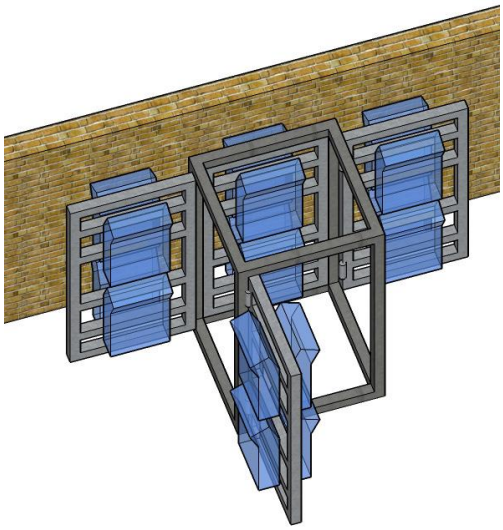

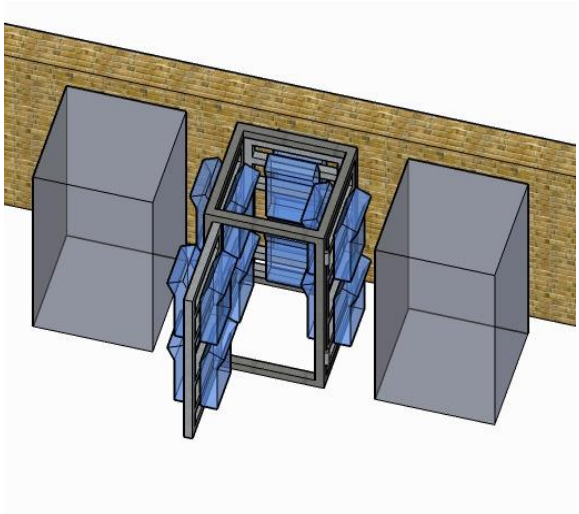

XD Infrastructure Innovations

DIF

Dynamic Interface Frame Scenario

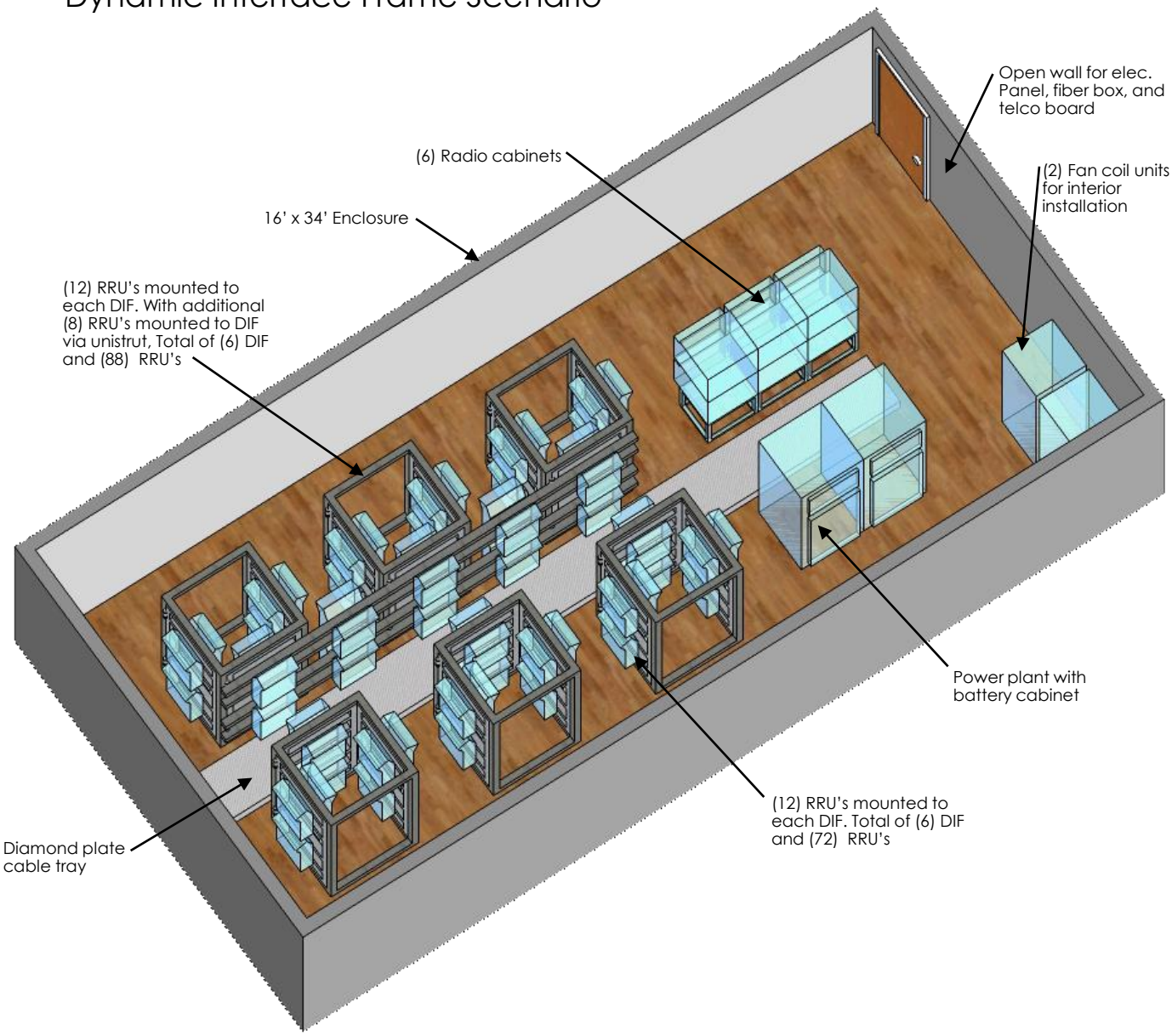

XD Infrastructure Innovations

DIF

Dynamic Interface Frame Q&A

These are the most common asked questions

1. Is the DIF seismic rated for Zone 4?

Yes, the DIF was designed by OVER calculating the Zone 4 requirements. Structural calculation can be provided at anytime and are also located on our website for easy access.

2. Is the DIF have a warranty?

Yes, the DIF comes with a warranty as long as the installed equipment is approved by XD Infrastructure Innovations and is within structural loading capacity provided by XD Infrastructure Innovations.

3. How will coax be routed to DIF since the DIF has operating doors to access RRU's?

The RRU's will be fixed to the DIF. When routing the coax, the doors will need to be opened and we will use ½" SuperFlex coax jumpers to the diplexers to prevent kinking or wear vs. standard coax jumpers. Once the SuperFlex jumpers are installed, the frame doors will be closed and there will be slack in the jumpers to prevent them from kinking or getting damaged. To securely fasten the Superflex jumpers, stackable coax clips will be used to secure the SuperFlex jumpers to the DIF. The DIF also comes with a built in coax cable tray located at the bottom of the frame which is elevated off of the ground to keep jumpers from sagging.

4. Why would we need a DIF if manufacturing companies are offering RRU integrated antennas?

Today most manufactures only offer single band RRU integrated antennas. If you are trying to combine two bands on that antenna it will not work, the antenna will need to be swapped for a dual band antenna and RRUs will need to be installed. Another reason is that these RRU integrated antennas are not cositable, meaning you cannot add capacity to these antennas. When capacity is needed the antenna will need to be swapped and RRU's will need to be installed. These RRU integrated antennas will be the future, however the DIF provides a solution to today's issues and obstacles.

5. How are the RRU's vented from heat dissipation?

The manufactures engineer RRU's for indoor and/or outdoor use and are able to function properly in -40 to 140 degree(f) weather. There are no intake or exhaust in RRU's and are ambient cooled, meaning that they are cooled by the natural air flow. The DIF does not provide any shielding or blockage from air circulation and RRU's will function properly.

XD Infrastructure Innovations

DIF

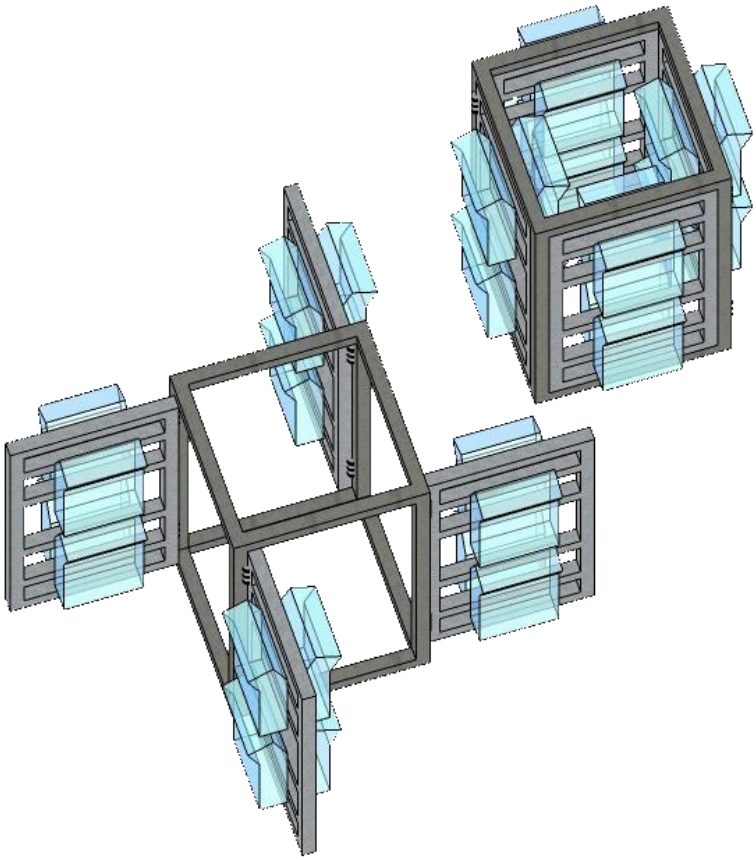

The Conclusion

The Dynamic Interface Frame (DIF) solves all the known issues above by condensing the footprint of the equipment and utilizing all aspects of the frame. This is a versatile design which can be mounted in the middle of the room, against a wall, indoor, outdoor, etc. There are no limits to this design which can also be expanded in width, depth, and/or height depending on space restriction.

A search has been done on various manufacture sites, search engines, and US patent search. No similar sites have been found which provided a similar design to mount RRU or like equipment on a compact frame which allows for multiple units to be mounted.

The DIF is PATENT PENDING